Overview of Persistent Memory: Media, Attachment & Usage

Dave Eggleston

Intuitive Cognition Consulting

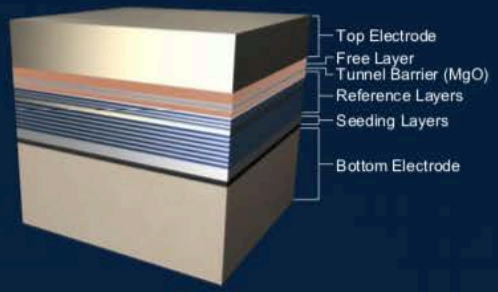

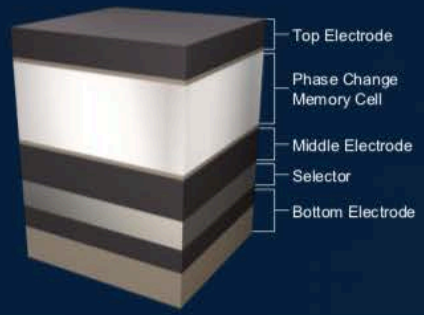

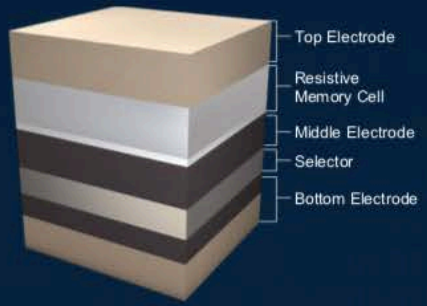

	MRAM Magnetic RAM	**PCRAM** Phase Change RAM	**ReRAM** Resistive RAM
INITIAL DEPLOYMENT	Edge	Cloud	
KEY ATTRIBUTES	✓ Extremely fast (as fast as L3 cache) ✓ High density (one transistor per cell) ✓ Non-volatile	✓ Faster than NAND ✓ Lower cost than DRAM ✓ Non-volatile ✓ Ideal for storage class memory	
ENABLED BY	New materials, 3D structures, Sub atomic-level precision films		

Source: Gary Dickerson, Applied Materials; A.I Design Forum, July 9, 2019

APPLIED MATERIALS

Processor Attachment: circa 2018

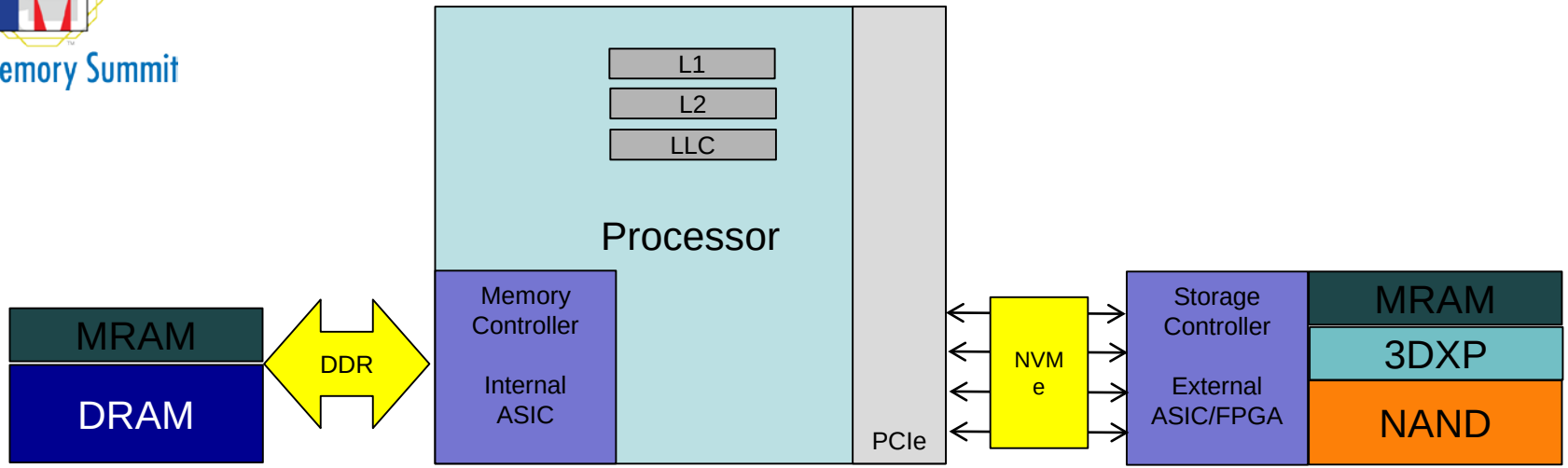

Memory	Characteristic	Storage
Load/Store	Access	Blocks & Files
Yes	Coherent?	No
Yes, No	Persistent?	Yes
50ns – 500ns	Latency	>5us

© Intuitive Cognition Consulting
Dave Eggleston

Processor Attachment: circa 2018

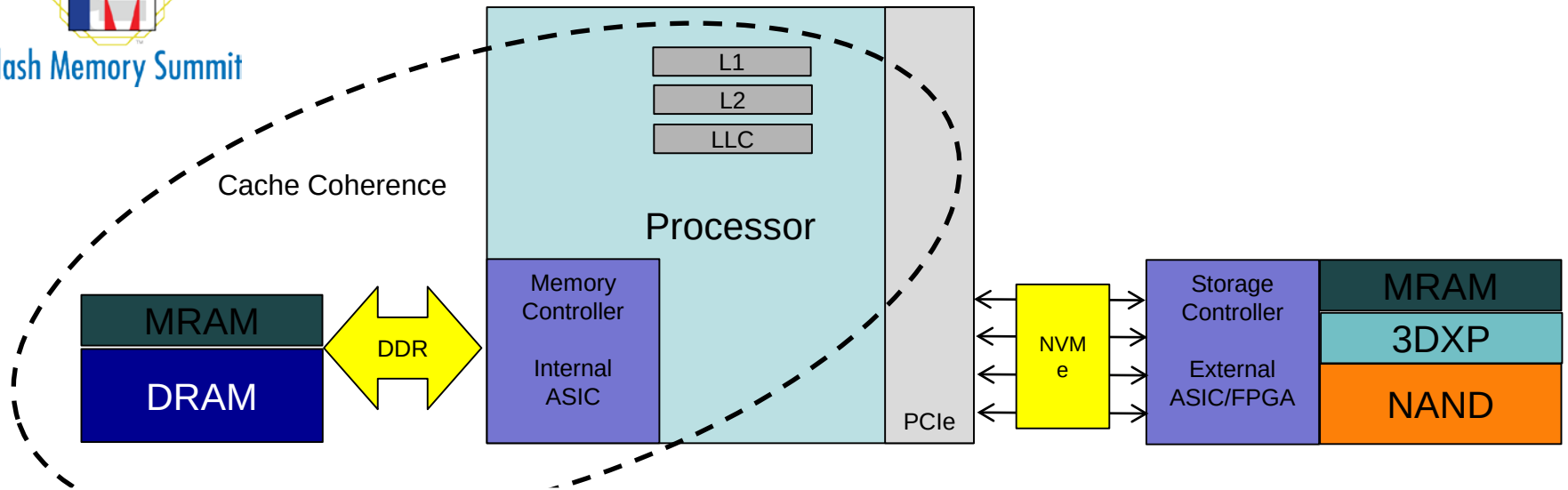

Memory	Characteristic	Storage
Load/Store	Access	Blocks & Files
Yes	Coherent?	No
Yes, No	Persistent?	Yes
50ns – 500ns	Latency	>5us

© Intuitive Cognition Consulting
Dave Eggleston

Processor Attachment: circa 2018

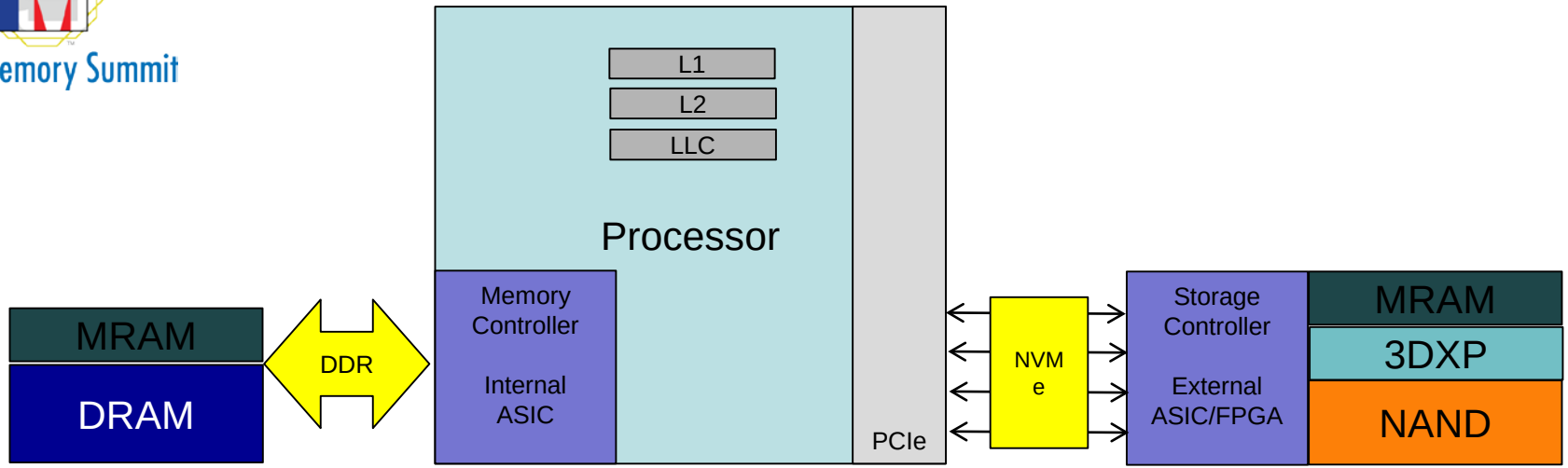

Memory	Characteristic	Storage
Load/Store	Access	Blocks & Files
Yes	Coherent?	No
Yes, No	Persistent?	Yes
50ns – 500ns	Latency	>5us

© Intuitive Cognition Consulting
Dave Eggleston

DDR Attachment: circa 2019

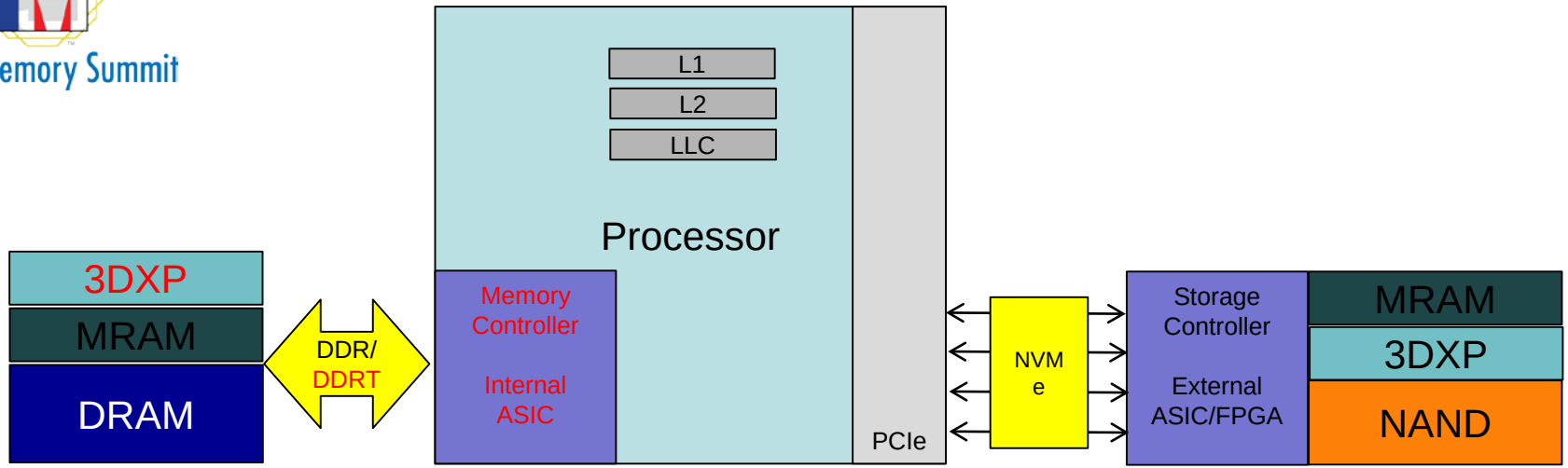

Memory	Characteristic	Storage
Load/Store	Access	Blocks & Files
Yes	Coherent?	No
Yes, No, Maybe	Persistent?	Yes
50ns – 500ns	Latency	>5us

© Intuitive Cognition Consulting
Dave Eggleston

DDR Attachment: circa 2020

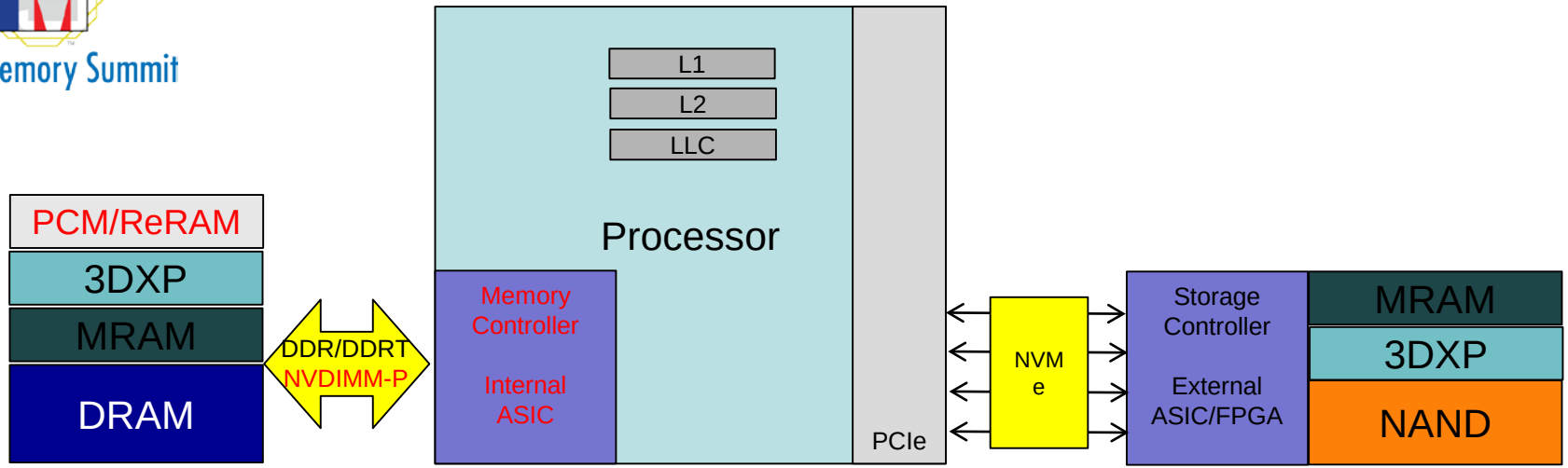

Memory	Characteristic	Storage
Load/Store	Access	Blocks & Files
Yes	Coherent?	No
Yes, No, Maybe	Persistent?	Yes
50ns – 500ns	Latency	>5us

© Intuitive Cognition Consulting
Dave Eggleston

Processor Attachment: circa 2020-21

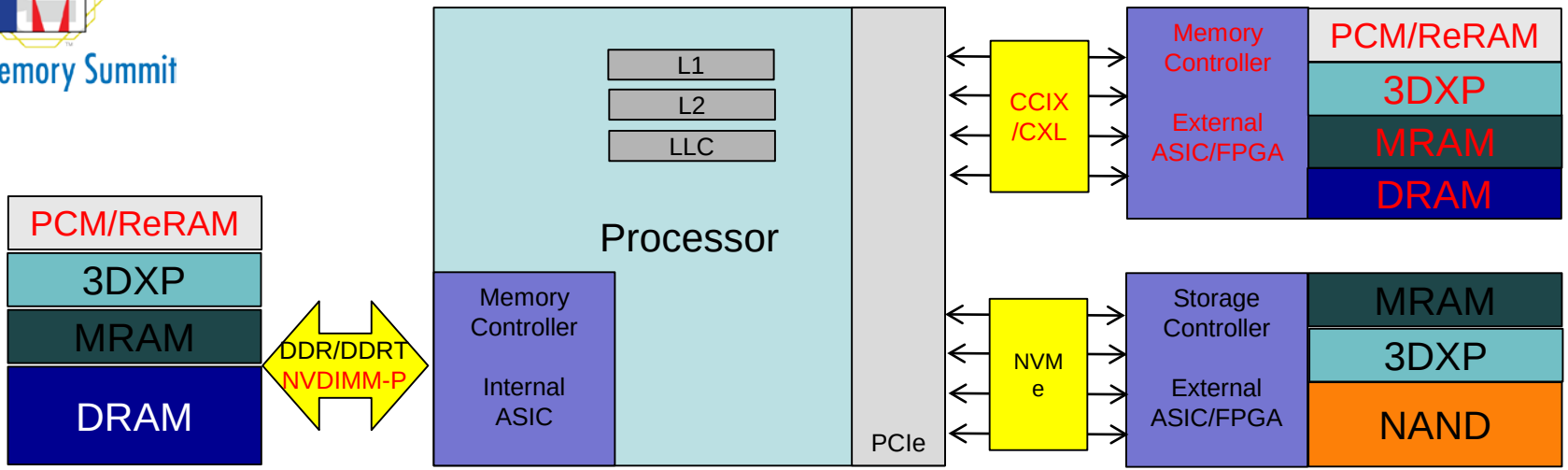

Memory	Characteristic	Memory	Storage
Load/Store	Access	Load/Store	Blocks & Files
Yes	Coherent?	Yes	No
Yes, No, Maybe	Persistent?	Yes, No, Maybe	Yes
50ns – 500ns	Latency	50ns – 500ns	>5us

© Intuitive Cognition Consulting
Dave Eggleston

Processor Attachment: circa 2020-21

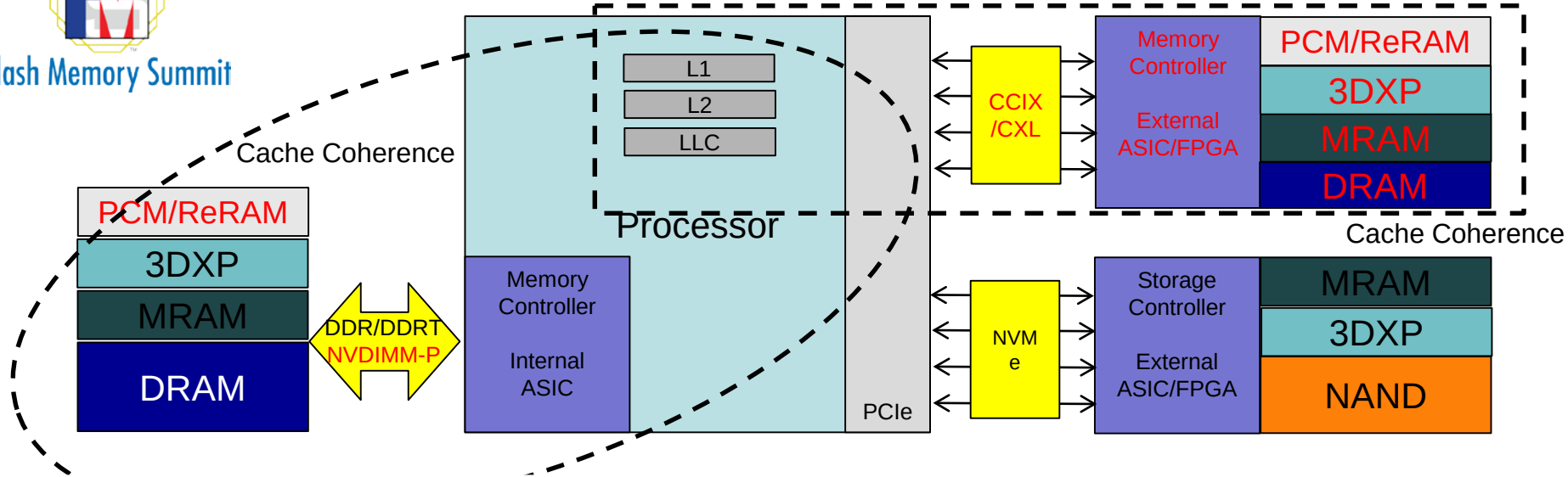

Memory	Characteristic	Memory	Storage
Load/Store	Access	Load/Store	Blocks & Files
Yes	Coherent?	Yes	No
Yes, No, Maybe	Persistent?	Yes, No, Maybe	Yes
50ns – 500ns	Latency	50ns – 500ns	>5us

© Intuitive Cognition Consulting
Dave Eggleston

Processor Attachment: circa 2020-21

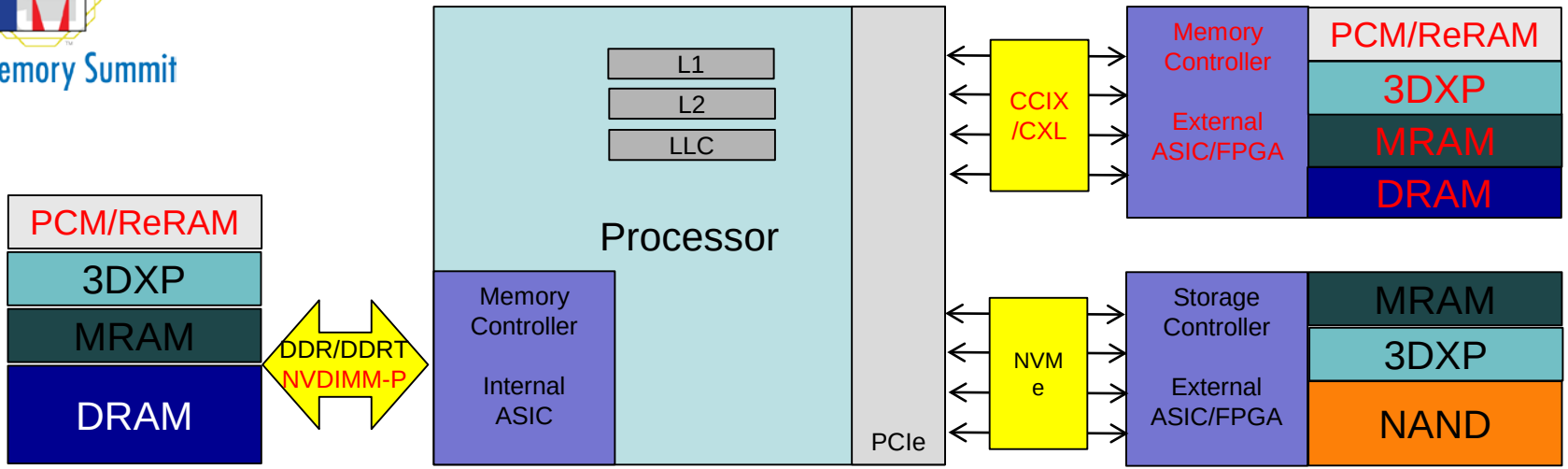

Memory	Characteristic	Memory	Storage
Load/Store	Access	Load/Store	Blocks & Files
Yes	Coherent?	Yes	No
Yes, No, Maybe	Persistent?	Yes, No, Maybe	Yes
50ns – 500ns	Latency	50ns – 500ns	>5us

© Intuitive Cognition Consulting
Dave Eggleston

Usage: Value Proposition(s)

1. PM = More Memory

   Pro: Existing applications want it

   Con: Compete directly vs. DRAM

2. PM = Persistent & Coherent

   Pro: Take full advantage of features

   Con: Application needs to know

© Intuitive Cognition Consulting
Dave Eggleston

Upcoming FMS Sessions

- 3DXP

  NewM-201; Wed 8:30am

- RRAM

  NewM-202A; Wed 4:35pm

- MRAM

  NewM-202B; Wed 4:35pm

- Life Beyond Flash

  NewM-301A; Thu 8:30am

© Intuitive Cognition Consulting
Dave Eggleston

Processor Attachment: circa 2020-21

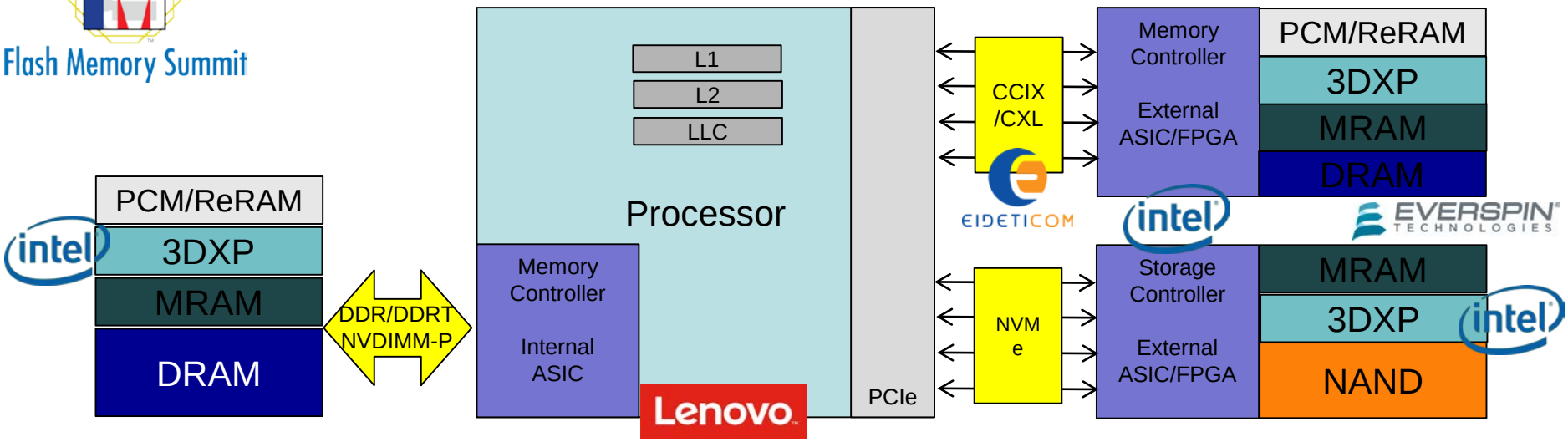

Memory	Characteristic	Memory	Storage
Load/Store	Access	Load/Store	Blocks & Files
Yes	Coherent?	Yes	No
Yes, No, Maybe	Persistent?	Yes, No, Maybe	Yes
50ns – 500ns	Latency	50ns – 500ns	>5us

© Intuitive Cognition Consulting
Dave Eggleston

Dave Eggleston
Intuitive Cognition Consulting
Technology & Business Strategy

Email: dave@in-cog.com
Twitter: @NVM_DaveE
LinkedIn:
linkedin.com/in/deggleston/